PHYC10004

SCHOOL OF PHYSICS
SEMESTER 2 EXAMINATION

WEDNESDAY 6 NOVEMBER 2019

EXAMINATION QUESTION PAPER

SEAT NUMBER										
STUDENT ID										

Do NOT write your name anywhere on your examination papers.

SUBJECT NAME:	PHYSICS 2: PHYSICAL SCIENCE AND TECHNOLOGY
SUBJECT CODE:	PHYC10004
EXAM DURATION:	3 hours NOT including reading time.
READING TIME:	15 MINUTES
TOTAL MARKS:	150 marks
NUMBER OF PAGES:	14 PAGES (INCLUDING THIS PAGE)

AUTHORISED MATERIALS

1. All students are authorised to have writing materials, and clear pencil cases in their possession.
2. Students are permitted to use only the University's authorised calculator
3. Students ARE NOT permitted to use: any dictionary.
4. Electronic devices – including lap tops, tablets, mobile phones and electronic dictionaries- are NOT authorised.

INSTRUCTIONS TO INVIGILATORS

1. This paper must REMAIN in the room and be collected at the end of the exam.
2. This Exam is NOT an open book exam. NO notes or books are permitted.
3. Students will require: this paper and TWO (2) script books.
4. Students are NOT permitted to annotate during reading time.
5. The final two pages of this exam paper contain formulae and data for the use of students. These pages may be detached, but students may NOT retain any part.

INSTRUCTIONS TO STUDENTS

1. This Exam is NOT an open book exam. NO notes or books are permitted.
2. Write your seat number and student ID number in the boxes at the top of this page at the START of WRITING TIME.
3. Attempt ALL questions. The total number of marks is 150.
4. Write your answers: on the RULED PAGES of your script book/s ONLY. Blank pages are for rough working out and will not be marked.
5. Two pages of formulae and data are attached to the paper. Detach these pages for use. Hand the pages to a supervisor with your completed examination paper at the end of writing time.
6. ALL communications-enabled & network accessible devices MUST be switched OFF & placed under your seat.

EXAMINATION REPRINTS

1. This paper may be lodged with the library.

Student: you are reminded that:

- Failure to follow examination instructions constitutes misconduct.
- You MUST NOT have any unauthorised materials or items with you that could be used to cheat, be unscholarly and/or gain an unfair advantage over other students.
- Unauthorised item/s must be declared and, wherever possible, surrendered to a supervisor.
- Penalties apply for misconduct.
- Any student found cheating, suspected of cheating, who attempts to cheat and/or who enables others to cheat in an exam is engaging in academic misconduct.
- Students found to have engaged in general or academic misconduct face penalties ranging from exclusion from the University to a fine, losing credit for the examination and/or the termination of their enrolment.
- A supervisor will submit a report in writing about incidents of alleged misconduct to the University.
- If you do not have photo ID with you, you will need to report to the Chief Supervisor at the end of the exam and have your photo taken.

Before your exam

- Please place your student card on top left hand corner of your desk.
- Empty your pockets and place all excess items under your desk or in the bin.
- Please read and review your question paper during reading time. Unless you are permitted to annotate your paper, you must not write during reading time.
- If you need assistance from a supervisor, including materials or a toilet break, raise your hand. Wait until the supervisor attends to you. Do NOT leave your seat without permission.
- Wireless communications, mobile phones and any device other than an authorised device must be switched off and placed under your desk.
- If you do not have your student card, please place another form of photo identification such as your passport or driver's licence, in the top left hand corner of the desk, instead.

During your exam

- You may not leave in the first half hour or the last fifteen minutes of any University of Melbourne examination.
- You must not communicate with, receive assistance from, or copy from the paper of another student, at any time during your exam.
- You must obey the reasonable instructions of the examination supervisors.
- Supervisors will inspect desks and materials that you access. Unauthorised material will be confiscated. You may be reported for possessing unauthorised items.

In an emergency

- In the event of fire, or an emergency evacuation, leave all examination material where it is. Make your way to the nearest exit. Assemble away from the building, in line of sight of a fire warden who will be wearing a hard hat. Await further instructions.

Signals and warnings at the end of your exam

- A warning signal will be given ten minutes ahead the end of your examination. After the signal, you are NOT permitted to leave the venue and must wait until dismissed.
- At examination's end a final signal will be given. The Chief Supervisor will order 'pens down'. You must cease writing and put your pen down, when ordered to do so.
- At exam's end place your papers in a bundle. Place any loose leaf sheets inside the front cover of your question paper OR insert all your documents inside the front cover of one of your script books.
- Remain seated. Do NOT move from your seat until the Chief Supervisor announces that students are dismissed from the room.
- DO NOT switch on your mobile phone, or use any other device, until you are OUTSIDE the venue.
- Photography is NOT permitted within any University examination or assessment venue.

This page has intentionally been left blank.

Do not write on this page

QUESTION 1 Electrostatics - Coulomb **[2 + 2 + 2 + 4 + 4 + (2 + 2) = 18 marks]**

Six point charges are arranged as in the diagram below. All charges are of equal magnitude. Charges q_1, q_2, q_4 and q_5 each have charge $-q$ C, while q_3 and q_6 each have charge $+q$ C. Charges q_1, q_2, q_4 and q_6 are arranged in a straight line at the distances labelled, in metres, whilst q_3 and q_5 are in the same plane as drawn.

Do not annonate on this image

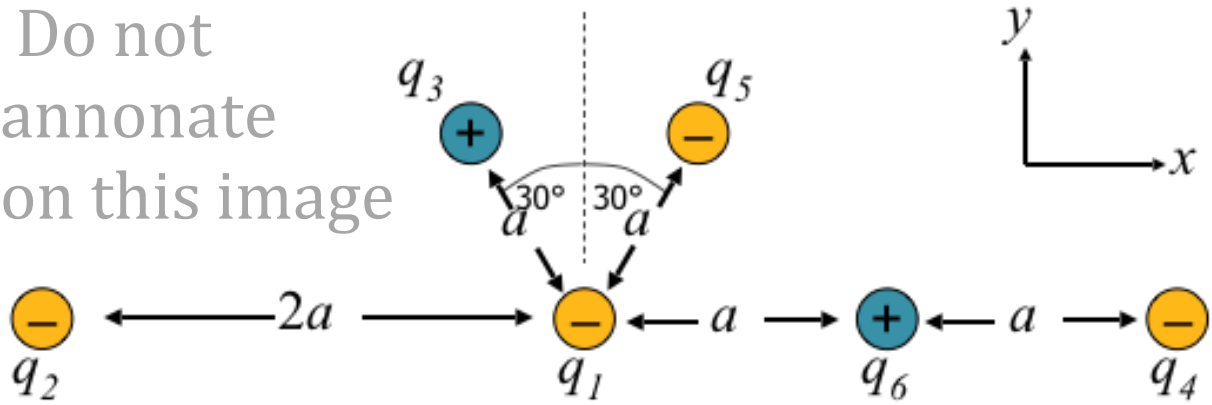

a) Draw and label all the forces acting on q_1, including relative direction and magnitude.

b) Find a functional expression for the net force on q_1 due to the charges in terms of q, a and θ.

c) Evaluate the expression in (b) to find the value of the net force and its direction on q_1.

d) If q_1 is displaced towards the right along the line of charges, give a formula for the net force and direction. [Hint: displace it by δx in the x direction and take derivatives.] Is the charge q_1 trapped?

e) Explain why Coulomb's Law obeys $1/r^2$ using a diagram, with reference to concepts of flux and electric field. State the Principle of Superposition and explain why the electrical force obeys the Principle of Superposition. Explain why the electrical force obeys vector addition.

f) i. Draw the electric field lines of an electric dipole.
ii. State the rules you are using in drawing the field lines.

(*Answer Question 1 (a)-(f) in the designated box on the following page.*)

Answers to Question 1(a)-(f)

QUESTION 2 Gauss **[(3 + 3 + 3) + (3 + 4 + 2) = 18 marks]**

a) A point positive charge, $+Q$, is placed at the centre of a spherical cavity of radius R formed in a large block of conducting material. Use Gauss' Law to find the magnitude and direction of the electric field at a distance:

i) $r = R/2$, inside the cavity;

ii) $r = R$, at the surface of the cavity;

and iii) $r >$ R from the centre of the cavity, inside the conductor.

b) Two long concentric conducting cylinders of radius a and b, respectively, each carry equal and opposite charges, with the inner shell having a linear charge density $+\lambda$ C m^{-1}. The cylinders are of negligible thickness.
Assuming that $b > a$, use Gauss's law:

i) to show that $\boldsymbol{E}$ vanishes for $r < a$ and $r > b$;

ii) to show that for $a < r < b$, $|\boldsymbol{E}| = \frac{\lambda}{2\pi r \varepsilon_0}$;

and iii) to describe the direction of the electric field in the space between the cylinders.

Answers to Question 2(a)-(b)

QUESTION 3 Electric Circuits **[(2 + 4) + (1 + 1 + 1) + 1 + (1 + 4) + 1 = 16 marks]**

Use Kirchhoff's rules and symmetry as necessary to consider the following circuit:

a) If switch S1 is open, what is the relation between the current I_1 and I_2 ?

Answer to Question 3(a)

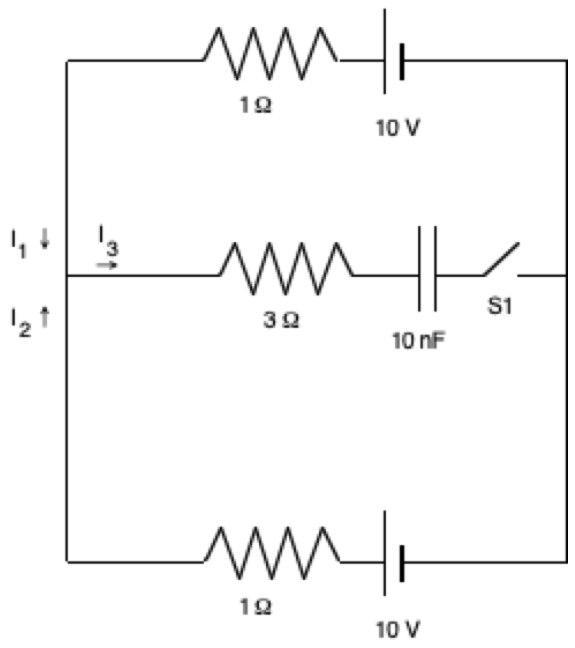

The switch S1 is then closed. Immediately after it is closed:

b) i) What is the relation between the current I_1 and I_2? Express I_1 and I_2 in terms of I_3.

ii) What will be the value of current I_3?

iii) What is the voltage drop across the 3 Ω resistor next to the capacitor at this time?

c) After a long time, what charge will have accumulated on the capacitor? What will I_3 be then?

(*Answer Question 1 (a)-(f) in the designated box on the following page.*)

Answers to Question 3(b)-(c)

d) Professor Cuthbert Calculus is an absent-minded scientist. You visit him at his laboratory. He invites you to assist him in the following experiments.

i) He has a large conducting rod on a wall, pointing out from the wall, which he has charged up to 10 000 V. You can hear some fizzing and crackling coming from the tip. He switches off the machine and asks you to ground the rod. Assuming that you agree, explain how you would do so safely.

ii) He asks you to keep your hands on the surface of a Van de Graaff accelerator which will be slowly raised to a maximum potential of 100 kV. The sphere on the Van de Graaff is 0.5 m off the floor. The initial current to the sphere is about 100 μA and the sphere accumulates 10 μC at the maximum potential over a period of a few seconds. Air breaks down (ionizes) at $E = 3 \times 10^6$ N/C. Assume any discharge occurs over a period of 1 ms.

The bottom of your shoes has a thickness of 3 mm. Explain what you would expect to occur [Give potential differences and currents in your answer.]

e) Nikola Tesla is pictured below, with discharges of several million volts cascading around him in his Colorado Springs Laboratory. The roar that accompanied such discharges could be heard ten miles away. Tesla is unharmed. Why? Explain in terms of electric field lines and conductors.

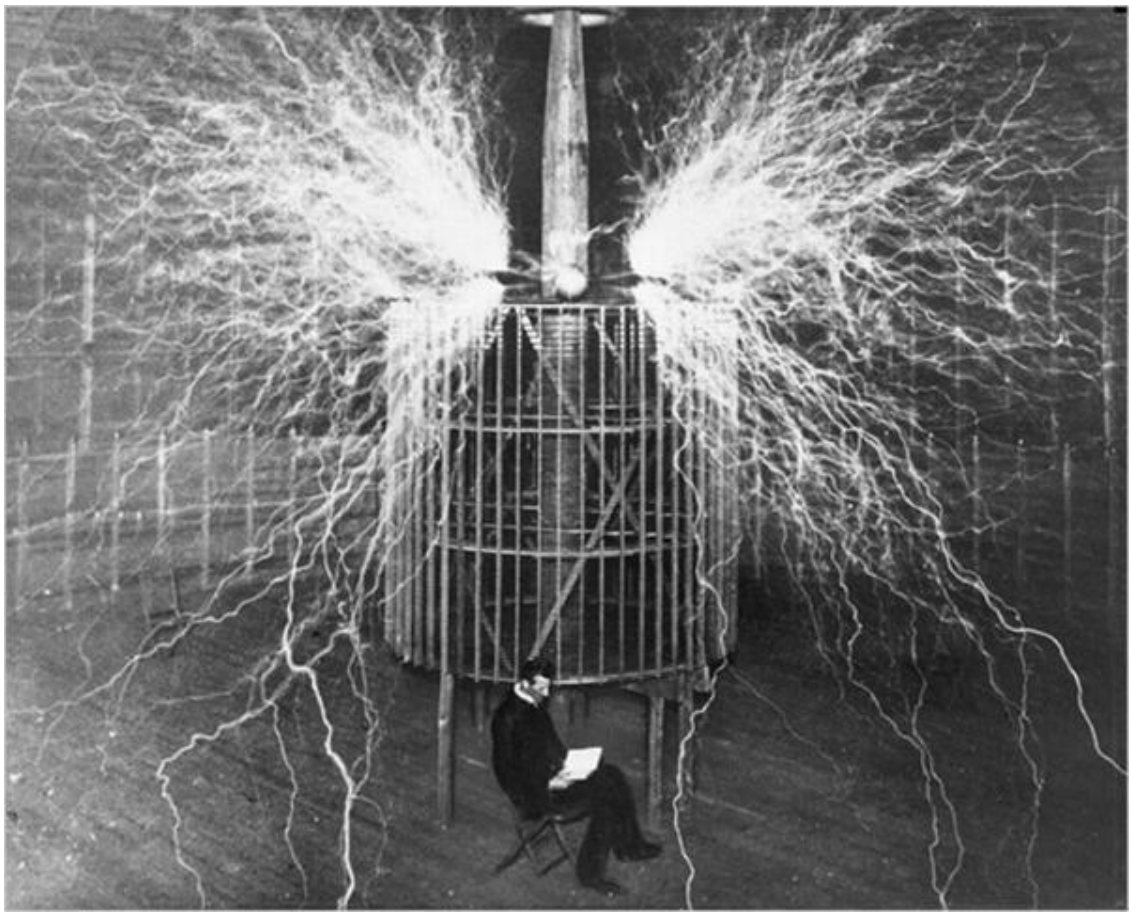

(*Answer Question 3 (d)-(e) in the designated box on the following page.*)

Answers to Question 3(b)-(c)

QUESTION 4 Ampere **[5 + 2 + 6 = 13 marks]**

a) Using the Biot-Savart Law, show that the magnetic field due to an infinitely long straight wire carrying a current *i* amperes, at a radial distance *r*, has magnitude given by $B = \frac{\mu_0 i}{2\pi r}$ and explain direction.
[Hint: you might find the result $\int \frac{R ds}{[s^2+R^2]^{3/2}} = \frac{s}{R[s^2+R^2]^{1/2}}$ useful.]

b) Show that your answer to part a) above is consistent with Ampere's Law.

Answers to Question 4(a)-(b)

c) Imagine that we have a current-carrying cylinder made from a perfect conductor, with a cylindrical hole through its centre. The inner radius is a m and the outer radius is b m. The current direction is perpendicular to the page in the diagram below. The cross-sectional current density in the cylinder is J Am^{-2}. Indicating any assumptions you make, determine the magnetic flux density [B-field] inside the cylinder for $a<r<b$.

Answer to Question 4 (c)

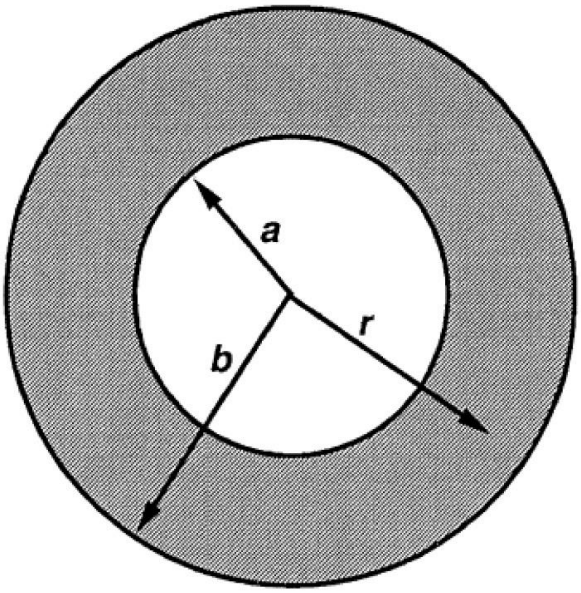

QUESTION 5 Induction **[3 + (3 + 4) = 10 marks]**

(a) A particle of mass m and charge q is moving in a circular path in a magnetic field B. Show that its kinetic energy is proportional to r^2, the square of the radius of its path. [Hint: use the equation for centripetal motion, $F = mv^2/r$]

Answer to Question 5(a)

(b) (i) A demonstration showed a fan-shaped plate of aluminium swinging through a large 'C' magnet, slowing down on each pass through the magnet and then stopping. Why did the aluminium plate slow down as it entered the magnetic field? Use the RH grip rule in your answer to explain the sign of the effect.

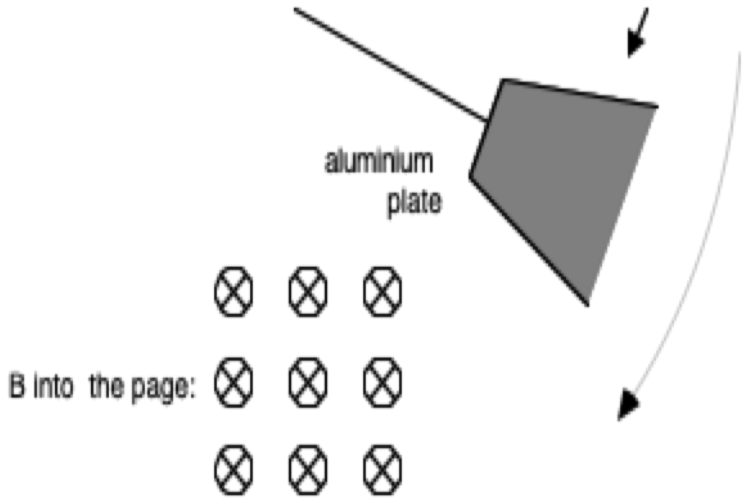

(ii) When a different plate was introduced, with slots in the plate separated by 2 mm, the behaviour of the swinging fan changed dramatically. Compare the number of oscillations of this plate to the behaviour of the plate in (i). Explain in terms of your answer to part (a), eddy currents and the applicable formula describing their cause.

(Answer Question 5 (b) in the designated box on the following page.)

Answers to Question 5 (b)

QUESTION 6 Fluids **[2 + 3 + 3 + 3 = 11 marks]**

An artificial lake is contained by a dike. This dike has developed a circular hole of 1.2 cm diameter. If hole is 3 m below the water level

i) What is the force exerted on this hole by the water?
ii) How long would take for the released water to fill 2 acres of land (2,468 m^2) to a depth of 1 m? Assume the density of the water is 1.0 kg/m^3 and that the hole remains constant in size.
iii) What will be the pressure exerted on the flooded area by the water?
iv) In a flood, objects may be displaced. A big box with a mass of 500 kg and a volume of 1 m^3 lies at the bottom of the flooded area. How much force is needed to lift it at *constant velocity*?

Answers to Question 6 (i) – (iv)

Answers to Question 6 (i) – (iv) - continued

QUESTION 7 Heat and Work **[(2+ 2 + 2) + 2 + 3= 11 marks]**

a) A cylinder of Nitrogen (diatomic molecule) gas has a volume of 15,000 cm^3 and a pressure of 100 atm.

b)

i) What is the thermal energy of this gas at room temperature (20 °C)?

ii) What is the mean free path in the gas ($r = 1.0 \times 10^{-10}$ m) ?

iii) The valve of the cylinder is open and the gas is allowed to expand slowly and isothermally until it reaches 1 atm. What is the change in the thermal energy of the gas?

b) Even if a person shows no visible perspiration, this person will still evaporate about 500 g of water from their lungs daily. How many Joules of heat are removed by this evaporation? What is the rate of heat loss in watts due to this process?

heat of vaporization of water is 2260 kJ/kg

c) In the kinetic theory of gasses explain what is meant by the "equipartition of energy".

Answers to Question 7 (a)-(c)

Answers to Question 7 (a) – (c) - continued

QUESTION 8 Particle wave duality **[(2 + 2 + 3) + (2 + 2) + 3 + (2 + 2) = 18 marks]**

a) The work function for rubidium is 208.4 kJ/mol.

i) What is the minimum amount of energy needed to eject a single electron from the surface of rubidium?

ii) What is the maximum wavelength, in nm, that can produce photoelectric current from rubidium?

iii) If a beam of green light with wavelength 550 nm strikes the surface of rubidium, will electrons be ejected? If yes, calculate the kinetic energy and speed of the ejected electron.

b) In a Compton collision with an electron inside rubidium, a photon of violet light (λ = 4000Å) is backscattered through an angle of 180°.

i) How much energy (in eV) is transferred to the electron in this collision?

ii) Could violet light eject electrons from the rubidium? Explain.

c) An electron and a proton are accelerated to 25.0% the speed of light. What are the wavelengths associated with each particle in nm? (m_e = 9.11 x 10^{-31}kg; m_p = 1.67 x 10^{-27} kg;)

d) An electron moves with a speed of 1.5 x 10^7 m/s, with uncertainty on its speed of 1 %.

i) What is the absolute value on the uncertainty of the electron's speed? If the location of the electron is simultaneously measured, what is the minimum uncertainty (Δx) in knowing the electron's location?

ii) Electrons have a diameter of about 10^{-17} m. Compare this with Δx, what can you conclude?

Answers to Question 8 (a)-(d)

Answers to Question 8 (a) – (d) - continued

QUESTION 9 The black body **[2 + (2 + 2 + 2) = 8 marks]**

a) The peak in the frequency spectrum of the so-called Cosmic Microwave Background (CMB) radiation, the relic radiation from the early stage of the universe, is f_{peak} = 160 GHz. What is the temperature of the CMB?

b) Venus' surface temperature is about 750 °C

   i) Estimate λ_{max} of the emitted radiation by Venus.

   ii) Venus is a sphere of 6×10^3 km radius, how much power does it radiate?

   iii) Find the spectral power per wavelength at $\lambda_{max.}$

Answers to Question 9 (a)-(b)

Answers to Question 9 (a) – (b) - continued

QUESTION 10 The atom **[3+ 1 + 2 + (2 + 2 + 2+ 3) = 15 marks]**

a) In classical physics an atom would not be stable because it would emit electromagnetic waves of frequency *f*, because the electron's orbit, seen edge on, can be seen as an electric dipole. At what electron radius, in nm, would the electron emit light with a wavelength of 600 nm?

b) Why in an atom are the energies of the electrons negative?

c) A hydrogen atom makes a transition from the n = 2 to the n = 1 energy level. Find the wavelength and frequency of the emitted photon.

d) In interstellar space, highly excited hydrogen atoms, called Rydberg atoms, have been observed. These can be described by standard Bohr atom theory.
i) Find the wavelength radio astronomers must tune to, so they can detect signals from electrons dropping from the n = 273 level to the n = 270 level.
ii) What is the radius of the Rydberg atom for which n = 273?
iii) What is the speed of an electron in this Rydberg atom?
iv) Compare the results in ii) and iii) with the radius and velocity of hydrogen atoms in their lowest state. What did you learn from this comparison?

Answers to Question 10 (a)-(d)

Answers to Question 10 (a) – (d) - continued

QUESTION 11 The nucleus, nuclear decay [(1 + 2) + (3 + 4) + 2 = 12 marks]

The nuclear reactor at ANSTO creates the isotope Mo-99 which then decays to the metastable isotope Tc-99m. The Tc-99m is used as a radioactive tracer for helping to determine the cause of a patient's illness. The Tc-99m tracer emits a gamma ray during its decay to Tc-99. Tc-99 then further decays to Ru-99 which is a stable isotope.
The decay series and relevant information for each isotope is given in the table below;

Name		**Isotope**	**Mass (u)**	**Half-life**	**Decay**
Molybdenum	Mo-99	${}^{99}_{42}Mo$	98.9077119	2.7474 days	Beta
Metastable Technetium	Tc-99m	${}^{99m}_{43}Tc$	98.9066984	6.0058 hrs	Gamma
Technetium	Tc-99	${}^{99}_{43}Tc$	98.9062547	211,000 yrs	Beta
Ruthenium	Ru-99	${}^{99}_{44}Ru$	98.9059393	stable	

Rest masses of: ${}^{4}_{2}He$ atom: 4.002602 u; electron: 0.000549 u; positron: 0.000549 u
${}^{1}_{1}H$ atom: 1.007825 u; neutron: 1.008665 u; proton: 1.007276 u

(a) The Molybdenum is transported to hospitals and produces the metastable Technetium to be injected into the patient.

(i) Mo-99 decays to the metastable Tc-99m via beta decay. Write the decay equation and justify whether the decay is β- or β+.

(ii) Show that the energy released during this decay is 1.216 MeV.

(b) To diagnose a patient, they are injected with the metastable Technetium which has been separated from the Molybdenum. The resulting gamma rays emitted as the isotope decays is an excellent radioactive source for imaging.

(i) Calculate the percentage of Tc-99m that will still be present in the patient's body after 1 day.

(ii) Both Mo-99 and Tc-99 are beta sources, yet only Tc-99 remains in the patient's body as Mo-99 is removed from the sample before the procedure. Using the data in the table, compare the amount of radiation received from each of the sources and comment on why it is fine for Tc-99 to remain in the body, but not Mo-99. Include calculations to justify your answer.

(c) Ruthenium is the only stable atom in the decay series. Determine the binding energy per nucleon of Ru-99.

Answers to Question 10 (a)-(d)

Answers to Question 10 (a) – (d) - continued

End of Questions - Additional answer pages and Formula Sheet follow

Additional answer page 1. Please state clearly which question you are answering and add a note on the actual answer page, clearly indicating that the answer will be continued here.

Additional answer page 2. Please state clearly which question you are answering and add a note on the actual answer page, clearly indicating that the answer will be continued here.

Additional answer page 3. Please state clearly which question you are answering and add a note on the actual answer page, clearly indicating that the answer will be continued here.

Formula Sheet and Useful Data for PHYC10004 (may be detached)

Constants

Mass of electron, m_e	9.109×10^{-31} kg = 0.00055 *u*	Atomic mass unit *u*	1.6605×10^{-27} kg = 931.49 MeV/c^2
Mass of proton, m_p	1.673×10^{-27} kg = 1.00728 *u*	1 eV = 1.6×10^{-19} J	
Mass of neutron, m_n	1.675×10^{-27} kg = 1.00866 *u*	Speed of light in vacuum, *c*	299 792 458 m s^{-1}
Electron charge magnitude, *e*	1.6×10^{-19} C	Gravitational acceleration, *g*	9.8 m s^{-2}
Permeability of free space, μ_o	$4\pi \times 10^{-7}$ T m A^{-1}		
Permittivity of free space, ε_o	8.85×10^{-12} C^2 N^{-1} m^{-2}	Planck's constant, *h* = 6.63×10^{-34} J s = 4.14×10^{-15} eV s	
Bohr radius, a_B	0.529×10^{-10} m	Rydberg constant, *R*	1.097373×10^{7} m^{-1}
Universal gas constant, *R*	8.31 J K^{-1} mol^{-1}	Boltzmann constant, *k*	1.38×10^{-23} J K^{-1}
Avogadro's number, N_A	6.02×10^{23} mol^{-1}	Stefan-Boltzmann constant, σ	5.67×10^{-8} W m^{-2} K^{-4}
Specific heat capacity of ice	2220 J K^{-1} kg^{-1}	1 atm = 101325 Pa = 760 mm Hg	
Specific heat capacity of water	4187 J K^{-1} kg^{-1}	Latent heat of fusion for water	333 kJ kg^{-1}

Formulae

Electromagnetism		
$\boldsymbol{F} = \frac{q_1 q_2}{4\pi\varepsilon_o r^2}\hat{r}$	$\boldsymbol{E} = \frac{\boldsymbol{F}}{q}$	$V(P) = \int_P^{\infty} \boldsymbol{E}.d\boldsymbol{s} = \frac{U(P)}{q}$
$W = -\Delta U$	$\boldsymbol{E} = \frac{q}{4\pi\varepsilon_o r^2}\hat{\boldsymbol{r}}$	$V = \frac{q}{4\pi\varepsilon_o r}$
$\oint \boldsymbol{E}.d\boldsymbol{A} = \frac{q_{enc}}{\varepsilon_o}$	$\Delta V = -\int_{P_2}^{P_1} \boldsymbol{E}.d\boldsymbol{s}$	$\boldsymbol{p} = q\boldsymbol{d}$ $\boldsymbol{\tau} = \boldsymbol{p} \times \boldsymbol{E}$ $U = -\boldsymbol{p}.\boldsymbol{E}$
$V = iR$	$P = iV = \frac{V^2}{R} = i^2 R$	$\frac{V_S}{V_p} = \frac{N_S}{N_p}$
$C = \frac{Q}{V}$	$U = \frac{1}{2}qV = \frac{1}{2}CV^2 = \frac{1}{2}\frac{q^2}{C}$	$C = \frac{A\varepsilon_o}{d}$
$\varepsilon = \kappa\varepsilon_0$	$U_E = \frac{1}{2}\kappa\varepsilon_o E^2$	$i = \frac{dq}{dt} = enAv_d$
$\boldsymbol{F} = q\boldsymbol{v} \times \boldsymbol{B}$	$\boldsymbol{F} = i\boldsymbol{l} \times \boldsymbol{B}$	$\oint \boldsymbol{B}.d\boldsymbol{A} = 0$
$B = \mu_o n i$	$\Phi_E = \int \boldsymbol{E}.d\boldsymbol{A}$	$\Phi_B = \int \boldsymbol{B}.d\boldsymbol{A}$
$d\boldsymbol{B} = \frac{\mu_0}{4\pi}\frac{i d\boldsymbol{s} \times \hat{\boldsymbol{r}}}{r^2}$	$\varepsilon = \oint \boldsymbol{E}.d\boldsymbol{s} = -\frac{d\Phi_B}{dt}$	$\oint \boldsymbol{B}.d\boldsymbol{s} = \mu_o i_{enc} + \mu_o i_D$
$i_D = \varepsilon_o \frac{d\Phi_E}{dt}$	$\mu = i \times (area\ of\ loop)$	$\boldsymbol{\tau} = \boldsymbol{\mu} \times \boldsymbol{B}$ $U = -\boldsymbol{\mu}.\boldsymbol{B}$

Fluids and Thermal Energy		
$R = A_1 v_1 = A_2 v_2$	$p + \rho g h + \frac{1}{2}\rho v^2 = const$ $p = p_{Atm} + \rho g h$	$\lambda = \frac{1}{4\sqrt{2}\pi\,(N/V) r^2}$
$pV = nRT$	$\rho = \frac{M}{V}$	$Q = mL$ $Q = mc\Delta T$
$pV^\gamma = const$ $\gamma = \frac{c_p}{c_V} \quad c_p = \frac{f}{2}R$	$U = \frac{f}{2}nRT$ $Q = nc_p\Delta T$	$\Delta U = Q + W$
$W = -\int p dV = -p\Delta V$	$W = -nRT\ln\frac{V_f}{V_i}$	$v_{RMS} = \sqrt{\frac{3kT}{m}}$

Modern Physics		
$\lambda_{MAX} T = 2898\,\mu m\,K$	$u_\lambda(T) = \frac{8\pi c h}{\lambda^5}\left(\frac{1}{e^{\frac{hc}{kT\lambda}} - 1}\right)$	$s_\lambda(T) = \frac{c}{4}u_\lambda(T)$
$P = \sigma\varepsilon A T^4$	$hf = K_{MAX} + \phi$	$E = hf = \frac{hc}{\lambda}$
$\lambda = \frac{h}{p}$	$c = f\lambda$	$\Delta\lambda = \frac{h}{mc}(1 - \cos\theta)$
$E_n = \frac{h^2}{8mL^2}n^2$	$r_n = \frac{4\pi\epsilon_o\hbar^2}{me^2}n^2 = a_o n^2$	$\Delta x \Delta p \geq \frac{\hbar}{2}$
$E_n = -\frac{me^4 Z^2}{8\varepsilon_0^2 h^2 n^2} = -\frac{13.6Z^2}{n^2}$	$a_o = \frac{\epsilon_o h^2}{\pi m e^2} = 52.92\,pm$	$v_n = c\alpha_{em}\frac{1}{n}$
$f = cR\left(\frac{1}{n_2^2} - \frac{1}{n_1^2}\right)$	$r = (1.2 \times 10^{-15} m)A^{\frac{1}{3}}$	$\alpha_{em} = \frac{e^2}{4\pi\epsilon_o\hbar c} \approx \frac{1}{137}$
$N(t) = N_0 e^{-\lambda t}$	$\lambda = \frac{\log_e 2}{\tau_{1/2}}$	$\frac{B.E.}{c^2} = (A - Z)m_n + Zm_p - m_{nucleus}$